DEGSON ELECTRONICS CO., LTD.

Product Specification

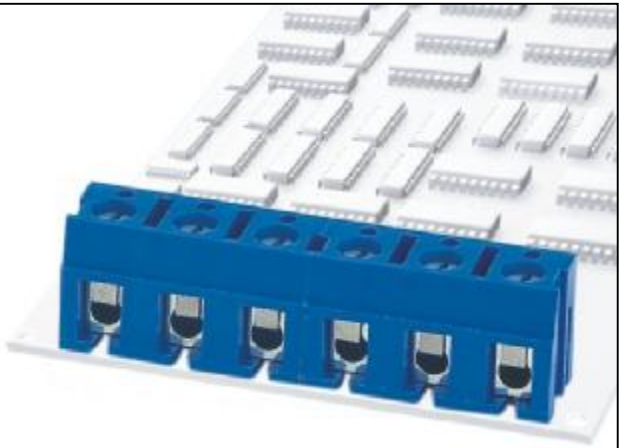

DG300-7.5

APPROVAL		
Electrical		
Standard	**UL**	**IEC**
Rated voltage	300V	250V
Rated current	10A	24A
Wire range	22-14AWG	2.5mm^2
Withstanding voltage	AC2000V/1Min	
Mechanical		
Torque	0.5Nm(4.4Lb-In)	
Ambient temperature	-30℃~+120 ℃	
Strip length	5-6mm	
Dimensions		
Pitch	7.5mm(.295″)	
Poles	2P,3P-24P	
Material		
Housing	PBT,UL94V-0	
Screws	M3,steel, Cr^{3+} Zn-plated	
Pin header	Brass,Tin plated	
Wire guard	Stainless steel	

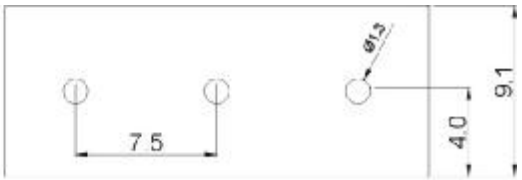

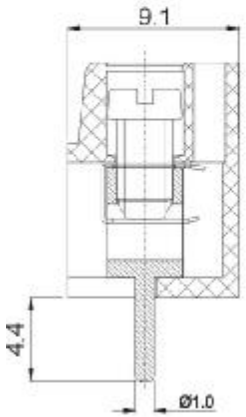

SECTION A-A

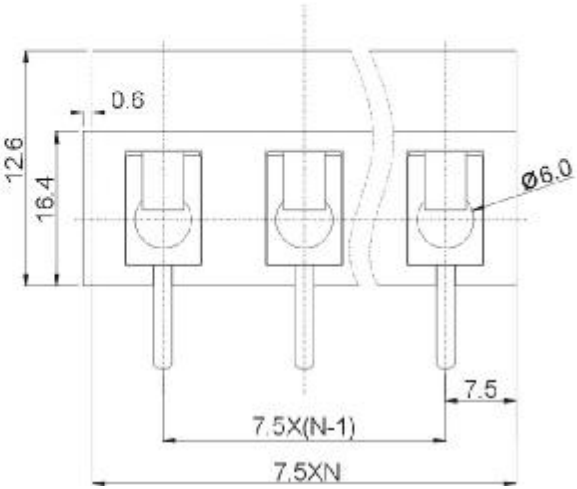

HOW TO ORDER :

DG300-5.0 – □ □ **P** — **1** □ — X X X (Customer Request)

Series number

No.of pole

1	Single pitch
2	Double pitch

Color

1	Grey	4	Green	7	Trans Parent
2	Blue	5	Orange	8	Yellow
3	Black	6	Red	9	White

mm (INCH)	DEGSON ELECTRONICS CO., LTD.
THIRDANGLE PROJECTION	NAME **DG300-7.5**